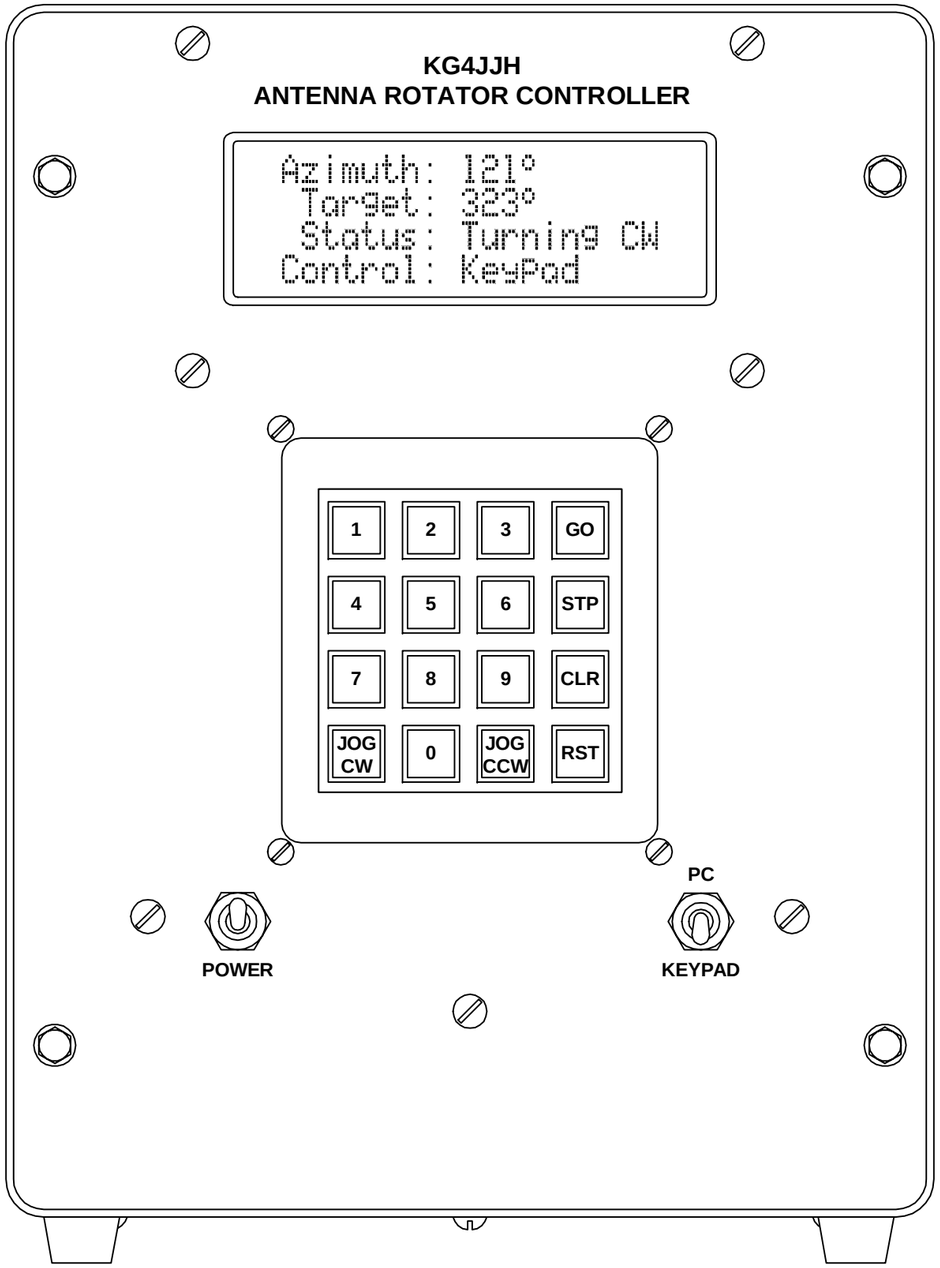

FRONT VIEW

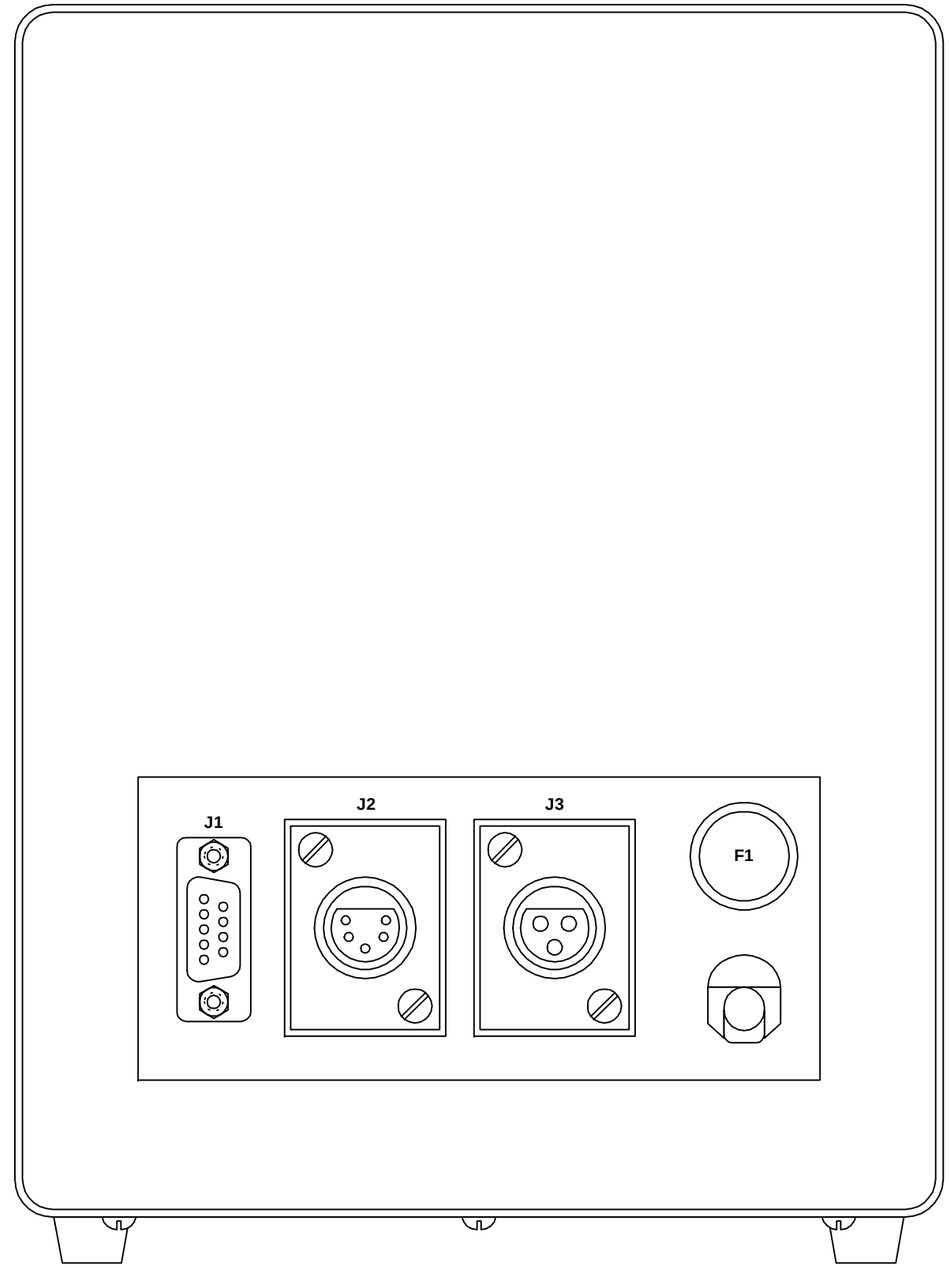

REAR VIEW

DESIGN: KG4JJH	09/23/07	*KG4JJH*
TESTED: KG4JJH	01/15/08	ANTENNA ROTATOR CONTROLLER ASSEMBLY
		SCALE: 1:1 · SHEET 1 OF 5 · REV. 0

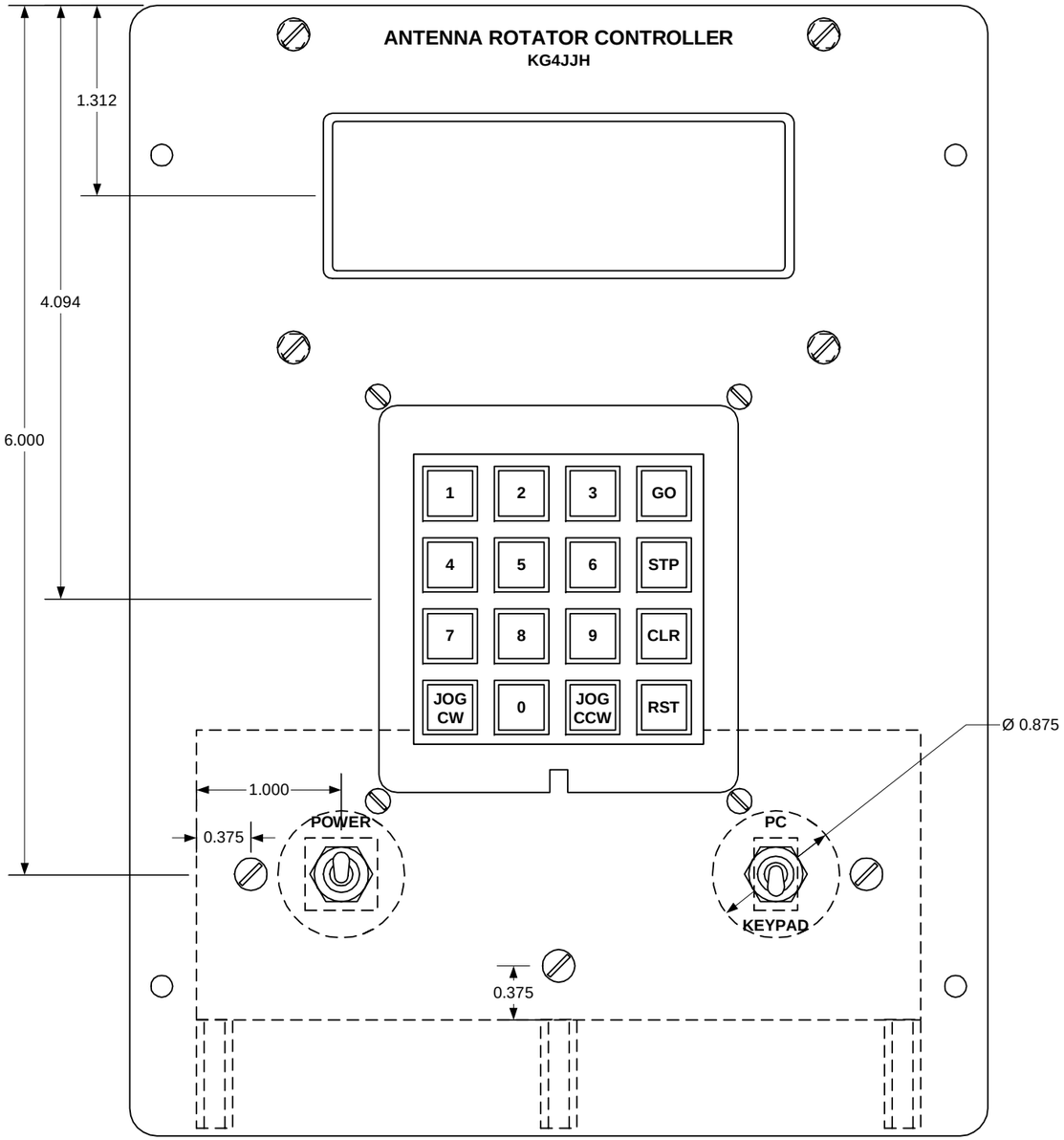

FRONT VIEW

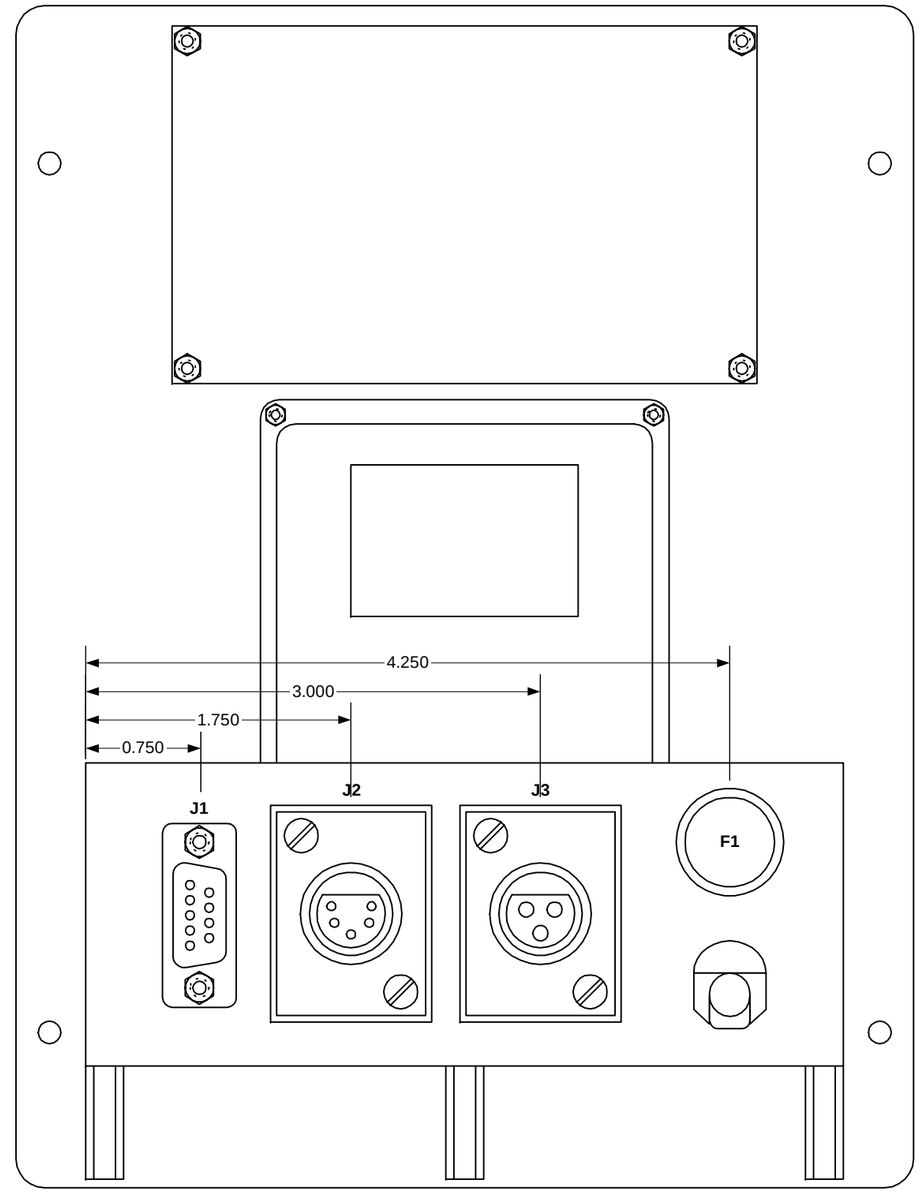

REAR VIEW

DESIGN: KG4JJH	09/23/07	*KG4JJH*
TESTED: KG4JJH	01/15/08	ANTENNA ROTATOR CONTROLLER LAYOUT
		SCALE: 1:1 · SHEET 2 Of 5 · REV. 0

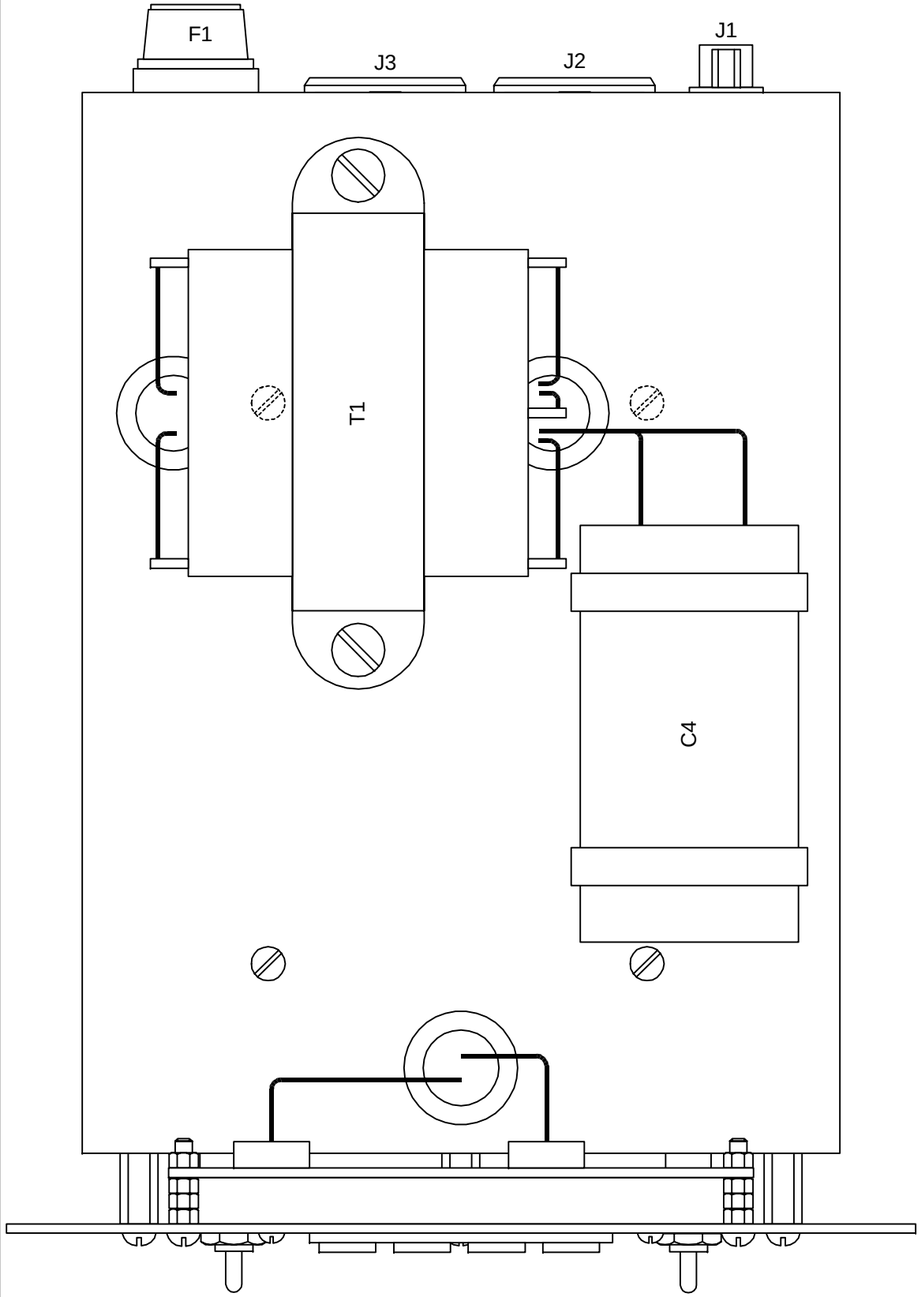

CHASSIS TOP VIEW
SCALE: 1:1

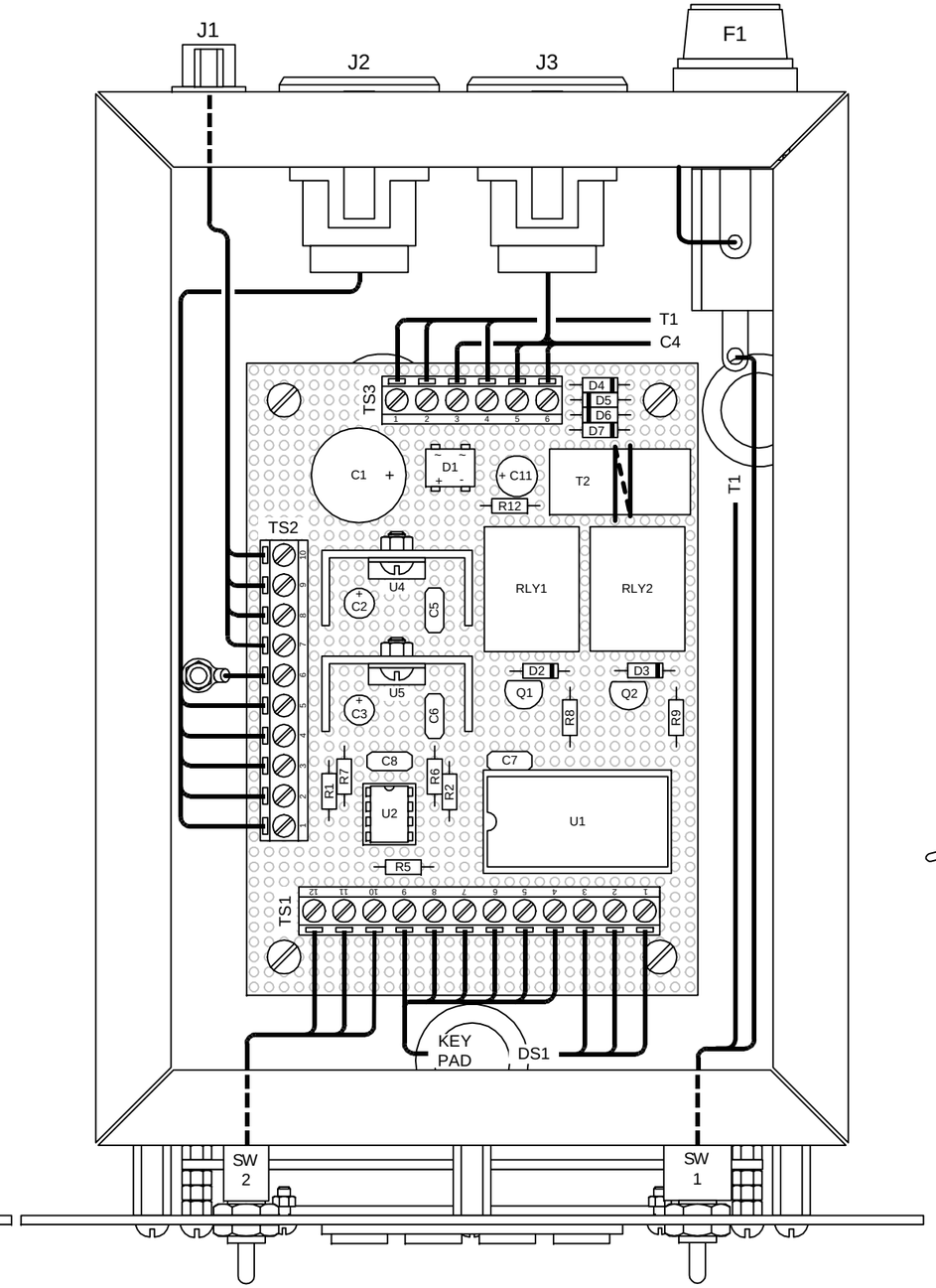

CHASSIS BOTTOM VIEW
SCALE: 1:1

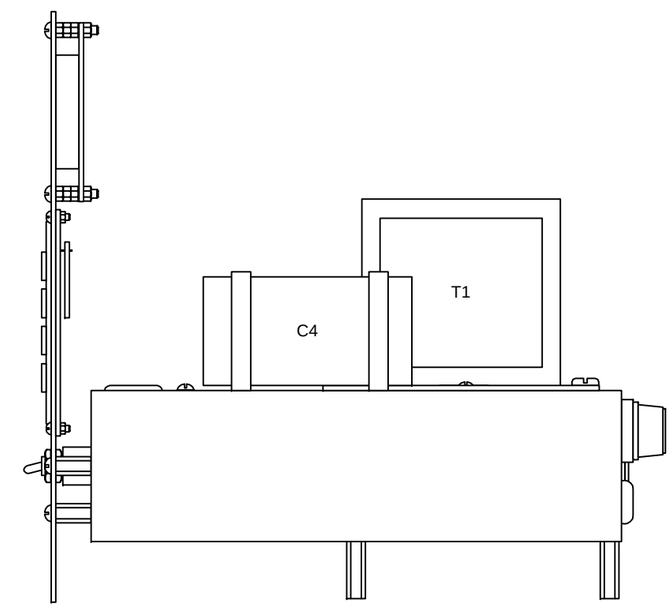

CHASSIS SIDE VIEW
SCALE: 1/2:1

DESIGN: KG4JJH	09/23/07	*KG4JJH*
TESTED: KG4JJH	01/15/08	ANTENNA ROTATOR CONTROLLER CHASSIS & PERF BOARD DETAILS
		SCALE: NOTED · SHEET 3 OF 5 · REV. 0

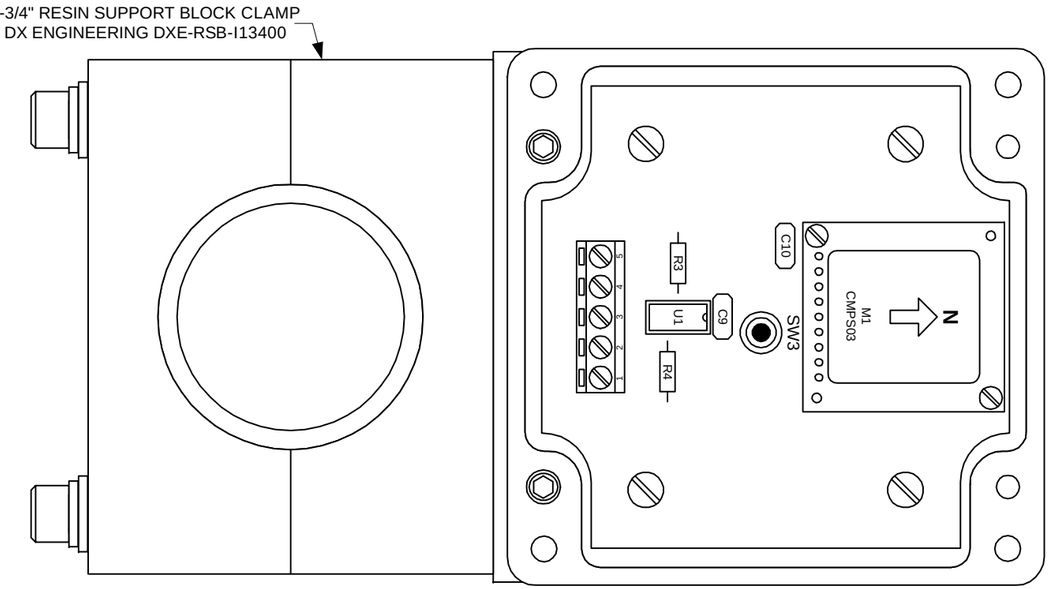

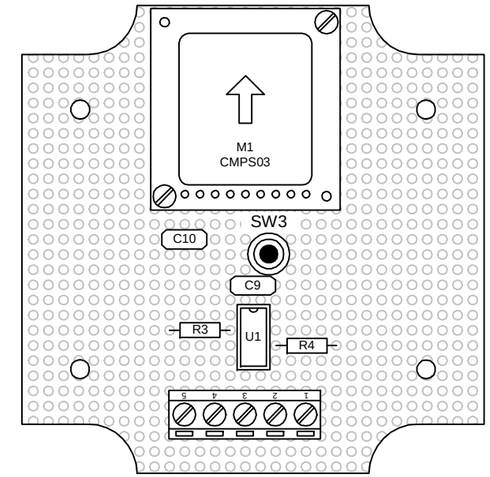

PERF BOARD ASSEMBLY

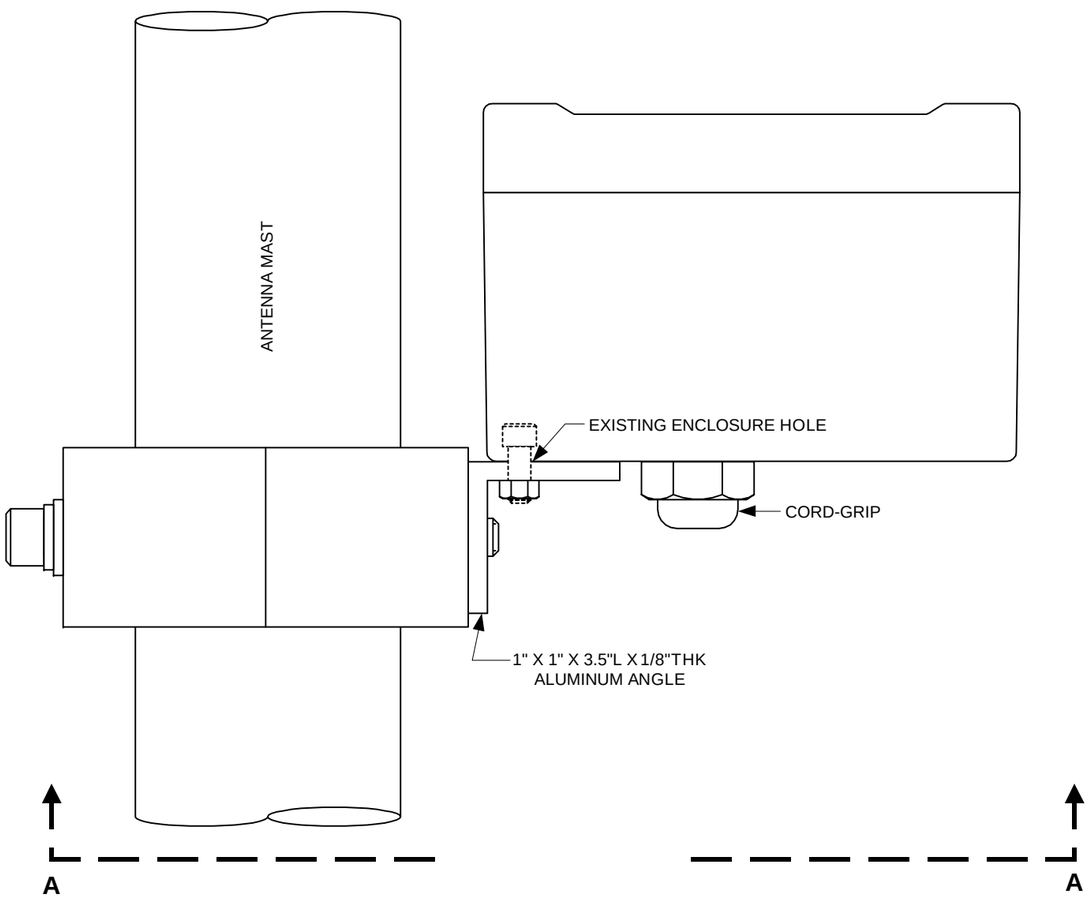

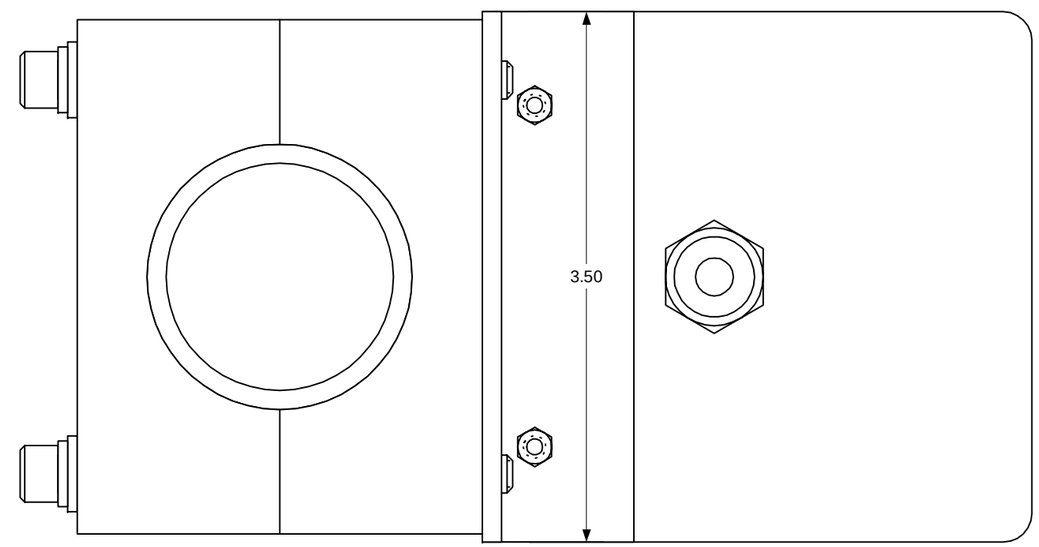

VIEW A-A

DESIGN: KG4JJH	09/23/07	*KG4JJH*
TESTED: KG4JJH	01/15/08	ANTENNA ROTATOR CONTROLLER MAGNETIC SENSOR DETAILS
		SCALE: 1:1 / SHEET 4 OF 5 / REV. 0

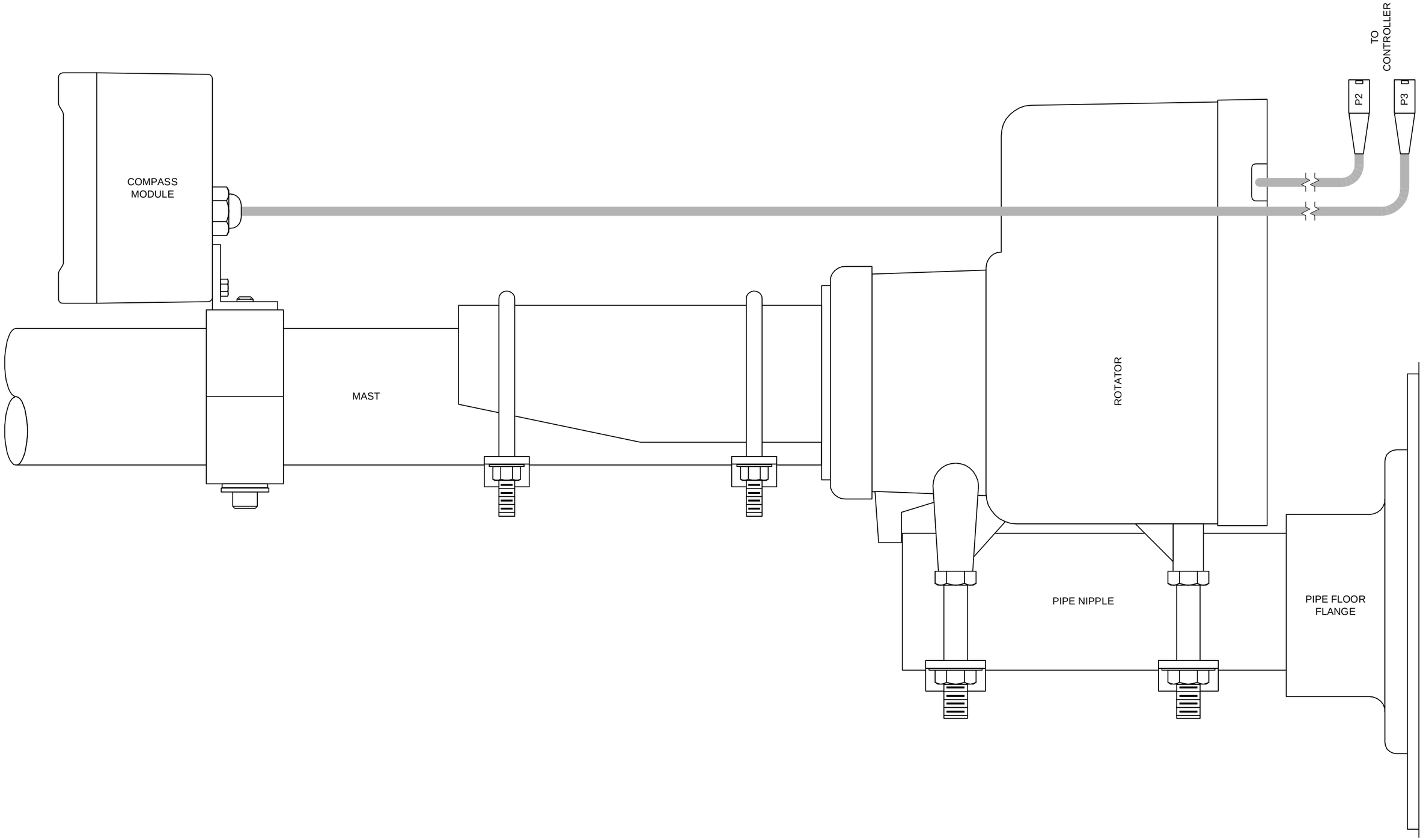

DESIGN: KG4JJH	09/23/07	*KG4JJH*
TESTED: KG4JJH	01/15/08	ANTENNA ROTATOR CONTROLLER MOUNTING DETAILS
		SCALE: NTS · SHEET 5 OF 5 · REV. 0